Code Practice Osc.
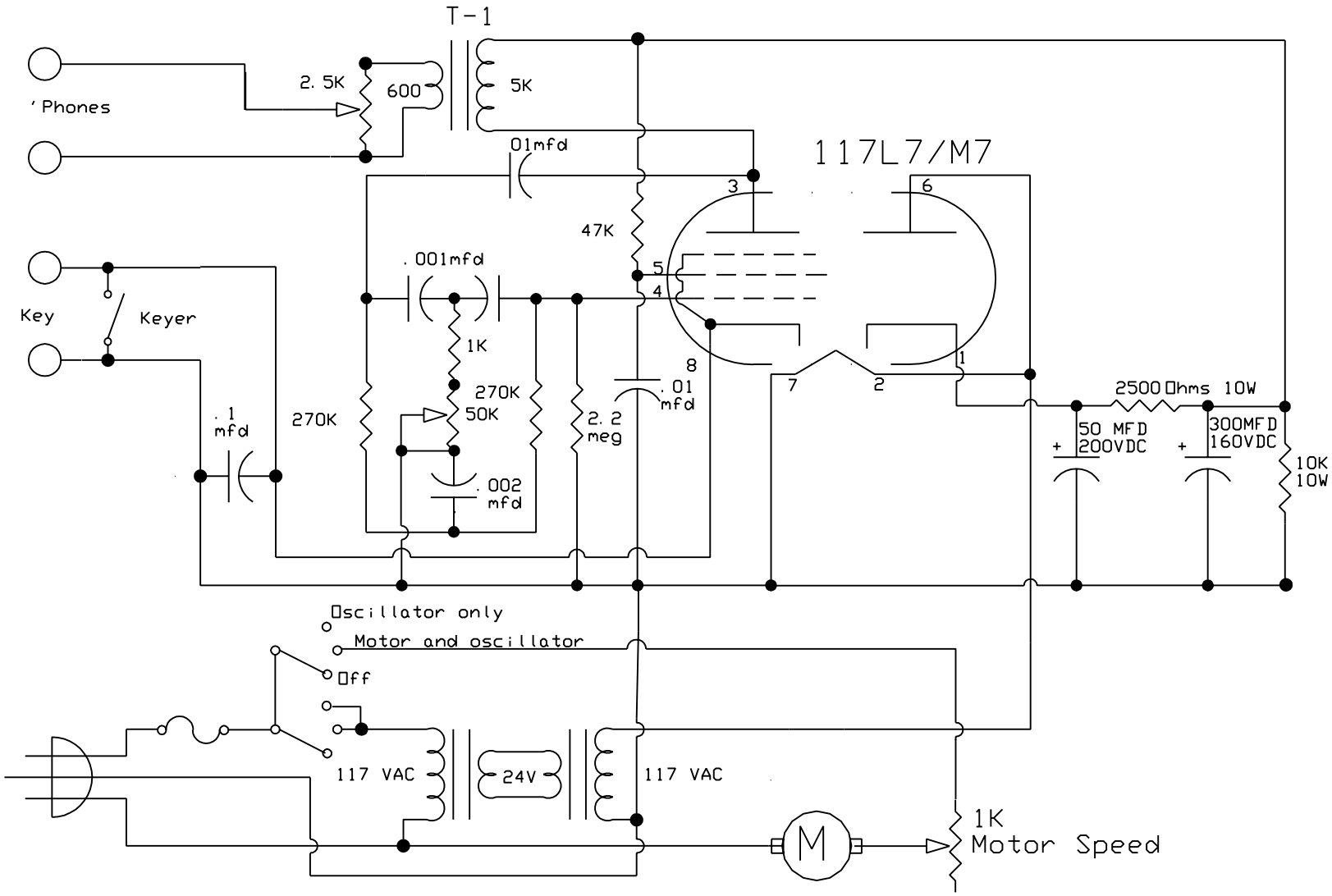
T-1 is NOT critical. Practically any transformer will work here.